1.6.13 ELECTRICAL EQUIPMENT

HST - CSIR

SC

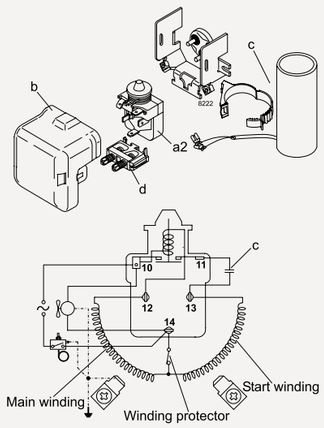

SC - external protector

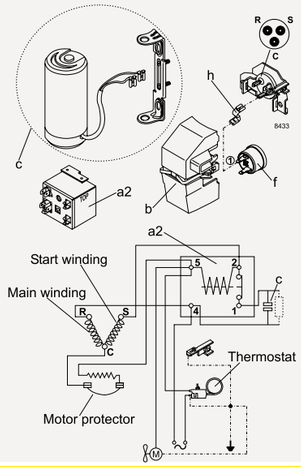

SC - external protector

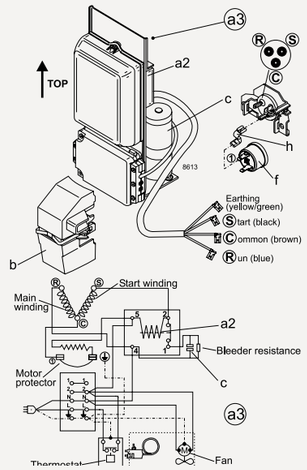

HST - CSIR

SCE - external protector

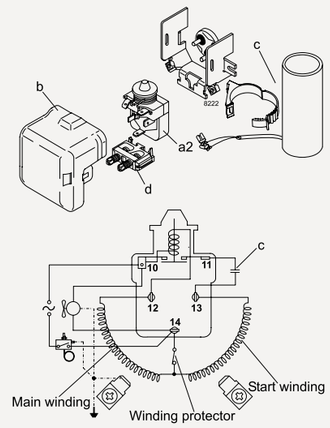

HST - CSR

SCE - external protector

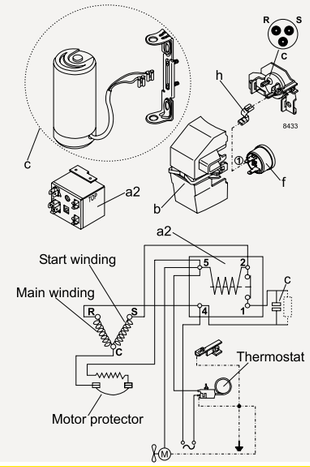

SCE - external protector

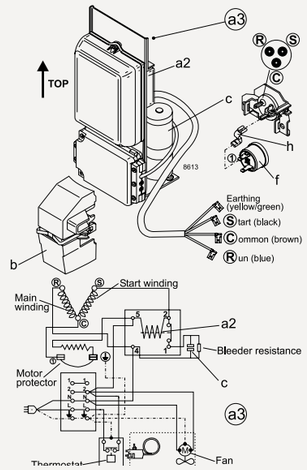

LST - RSIR

SC

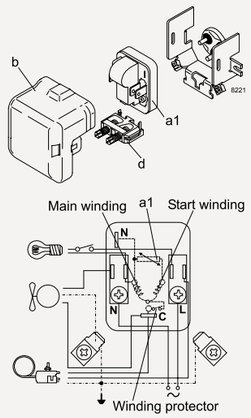

HST - CSR

SC - external protector

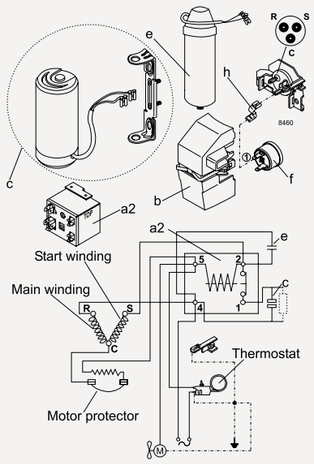

SC - external protector

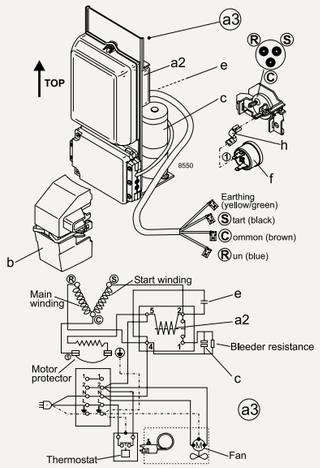

HST - CSR

SC

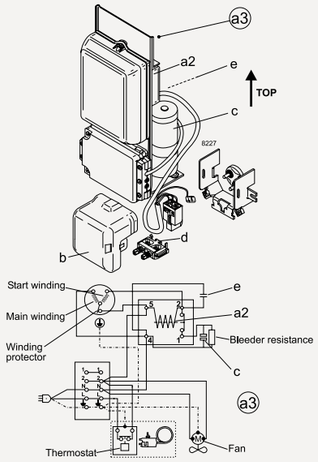

SC (kit) - alternative to starting device w. bracket

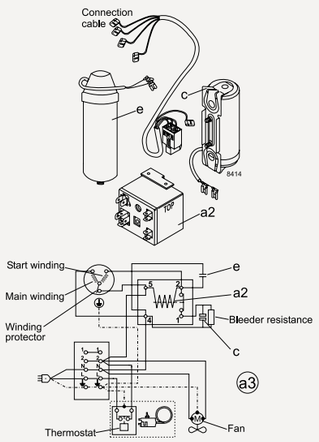

GS

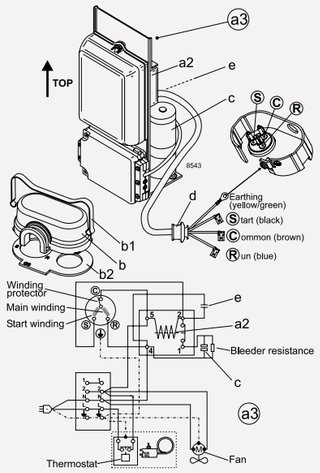

LST - RSCR

HKK/HTK/HXK/HZK (K-Series) - external protector, terminial board for HZK includes an ePTC

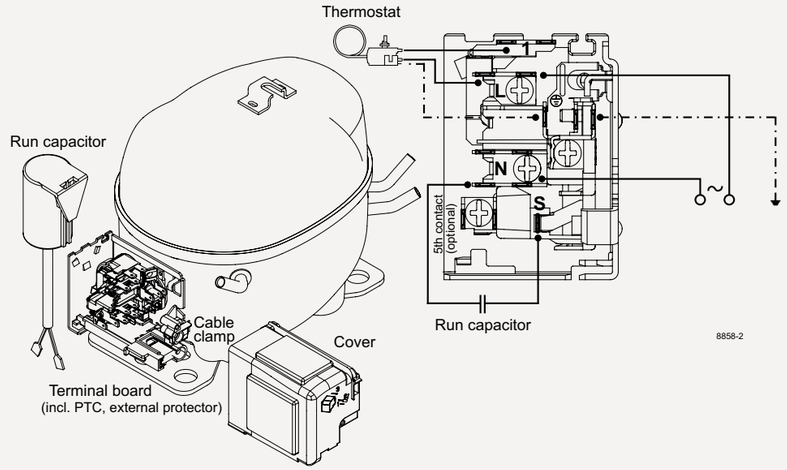

LST - RSIR
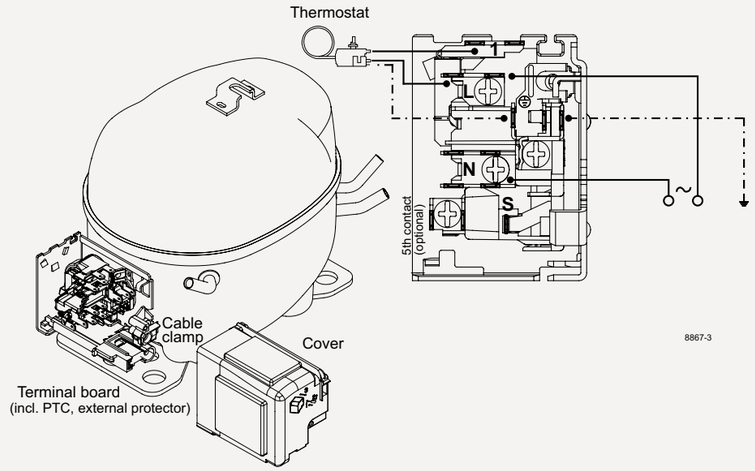
HMK/HTK/HXK-AT (K-Series) - external protector